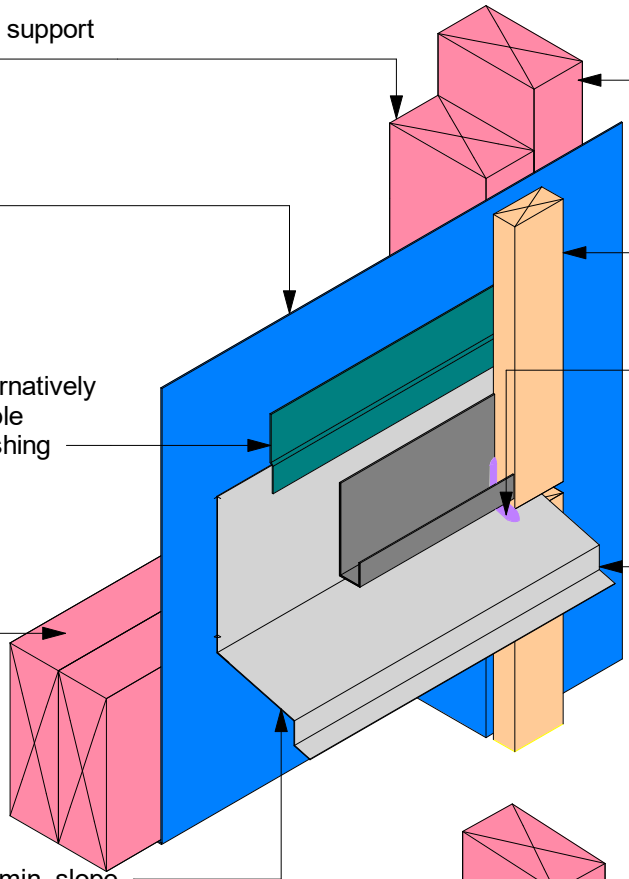

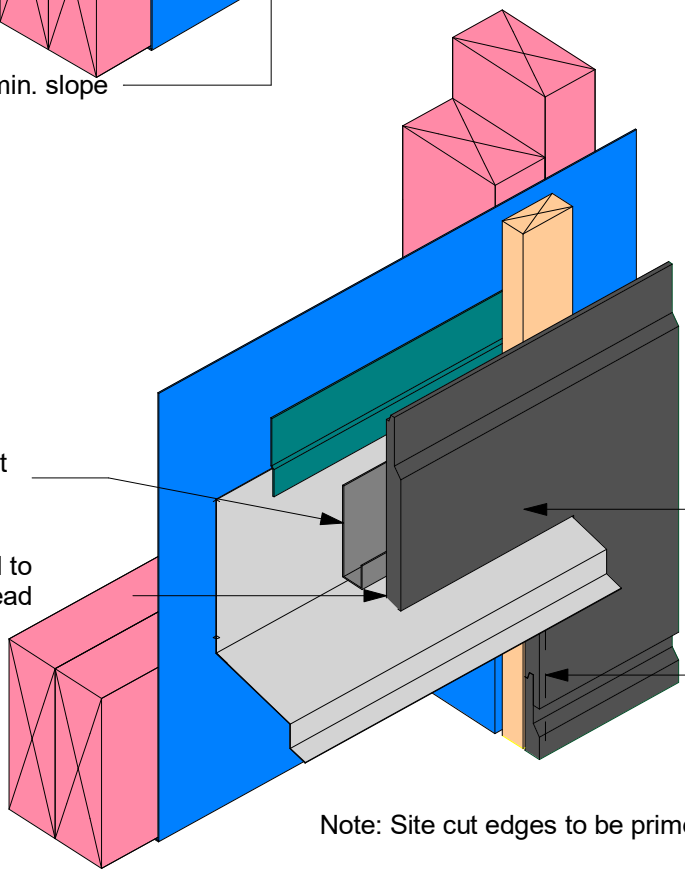

Note: Site cut edges to be primed

jhl_oblh14_u_023

jhl_oblh14.rvt

JamesHardie™

www.jameshardie.co.nz

Oblique™ Weatherboard 14mm - Horizontal

On Timber Cavity Batten with Flexible Underlay
WINDOW HEAD STOP END

October 2022
Scale:

Figure 23